The information contained in this drawing is the sole property of CWS Coil Winding Specialist.
Any reproduction in part or whole without written permission of CWS Coil Winding Specialist is prohibited.

REVISION HISTORY						
REV	ECN	DESCRIPTION	SIGN & DATE			
			BY	DATE	CHK	DATE
B		PRODUCTION RELEASE	RPR	8/24/04	JLAU	8/24/04

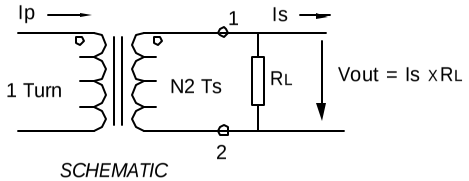

SCHEMATIC

Note: All measurements are carried out using rms value responding meter. Unless requested the terminating resistor and the 1-turn primary are not supplied.

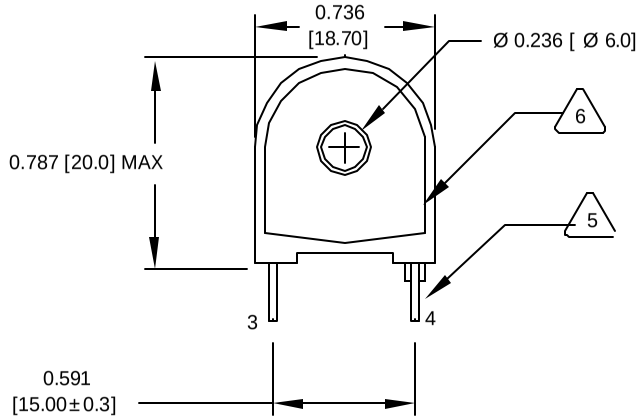

FRONT VIEW

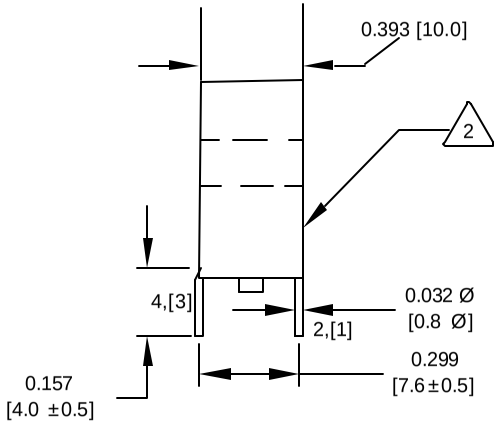

SIDE VIEW

6 WHERE SHOWN
MARK PART NUMBER AND REVISION

5 REMOVE INSULATION, SOLDERED TO LEADS

4 CONSTRUCTION: ENCAPSULATED USING BOBBIN.

OPERATING TEMP. = - 25 °C TO 125 °C
OUTPUT VOLTAGE AT RL AND MAX (In) = 0.4 V RMS
BURDEN RESISTOR (RL) = 100 OHMS
DC RESISTANCE @ 25 °C = 50 OHMS MAX
MAX AMPLITUDE ERROR WITHIN RANGE OF (In) = ± 5%
ACCURACY CLASS >= 5 %
= 10 AMPS RMS MAX.
MAX AC PRIMARY CURRENT WITHOUT SATURATION (I max),
= 4 AMPS RMS NOMINAL.
PRIMARY CURRENT RANGE WITH DEFINED ERROR TOLERANCES (In),
3 SPECIFICATIONS @ 25 °C :

WIRE: UL RECOGNIZED 130 °C RATED MAGNET WIRE
CWS BYTEMARK OR OTHER APPROVED PART
2 CORE: TAPE WOUND

BOBBIN RATING CLASS B (130 °C) REQUIRED
1 MATERIAL: UL RECOGNIZED 94V-0 FOR FLAMMABILITY

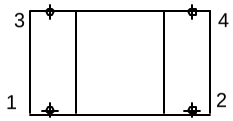

BOTTOM VIEW

Note: Pin 3 and 4 are only used for mechanical mounting on to PCB

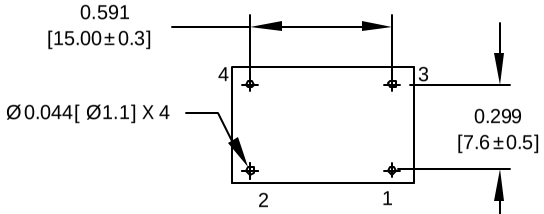

MOUNTING HOLES PATTERN

NOTES: UNLESS OTHERWISE SPECIFIED, 50/60 Hz CURRENT SENSOR.
UNIT: INCHES [MM]

QTY	CODE IDENT	MFG. P/N	DESCRIPTION	ITEM NO.

PARTS LIST

AUTOCAD	X	
SOLIDWORKS		
SIGN		DATE
DRAWN	RPR	8/24/04
CHECKED	JLAU	8/24/04
ENGR.	KSUM	8/24/04
APPR.	JLAU	8/24/04

UNLESS OTHERWISE SPECIFIED
DIMENSIONING AND TOLERANCE PER ANSI Y14.5M
ALL DIMENSIONS ARE IN INCHES AND [MILIMETERS].
TOLERANCE INCHES: .XXX=±.010 .XX=±.020 ∠=±0°30'
TOLERANCE METRICS: .XXX=±.254 .XX=±.51 ∠=±0°30'
ANGLE PROJECTION
DO NOT SCALE DRAWING

COILWS COM, INC
www.coilws.com
CWS Coil Winding Specialist.
1510 E. Edinger Ave.
Unit B. Santa Ana, CA. 92705

TITLE: 50/60 Hz Current Sense Transformer

SIZE B | DWG. NO. CT-0710-ST | REV B

SCALE 2=1 | SHEET 1 OF 1

CAD-FILE: